Managed Ethernet Switches and Routers

Lynx 3000 Series Gen2

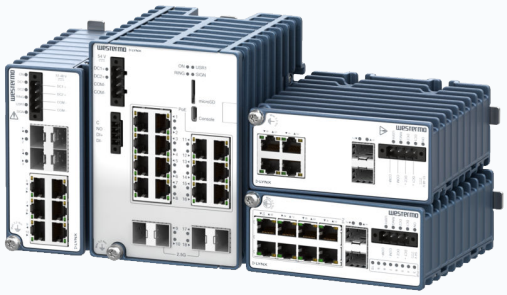

- **High performance and flexibility**
  - Layer 2 switching and Layer 3 routing models
  - Ethernet speeds up to 2.5 Gbit/s
  - Powered by WeOS for resilient networking, routing and segmentation
- **Built for demanding environments**
  - Fanless operation from -40 to +70 °C[a]
  - Rugged IP40 full-metal housing
  - Industrial, marine and trackside type tested
- **Compact and installation-friendly**
  - Flexible copper, SFP and PoE configurations
  - Up to 240 W total PoE power budget on selected models
  - Multiple integrated mounting options
- **Strong built-in cybersecurity**
  - Secure Boot and TPM-based hardware root of trust
  - VPN, stateful firewall and IEEE 802.1X
  - IEC 62443-4-2 Security Level 2 certified[b]

AREMA Am. Railway Engineering · EN 50121-4 Railway Trackside · EN 61000-6-2 Industrial Immunity · EN 61000-6-4 Industrial Emission · IEC 62443-4-2 Security Level 2 · NEMA TS 2 Traffic Controller Assemblies

Product Description

The Lynx 3000 series Gen2 comprises compact, high-performance managed Ethernet switches and routers for mission-critical OT networks. Based on the Lynx 3000 generation 2 platform, the range provides layer 2 switching and layer 3 routing, with Ethernet speeds up to 2.5 Gbit/s and a choice of copper, SFP and PoE configurations.

Engineered for demanding environments, Lynx 3000 Gen2 devices feature rugged, fanless IP40 full-metal housings and operate from -40 to +70 °C. Industrial-grade components and testing for vibration, shock, humidity, corrosive gases and electrical disturbances support high availability and a long service life. Available certifications and type-test compliance support deployment in industrial, marine and trackside environments.

The range extends from models for standard industrial connectivity to multi-gigabit variants for bandwidth-intensive applications. Support for resilient layer 2 networks, advanced layer 3 routing and network segmentation enables customers to address different requirements using a common product family. This simplifies network design, configuration and lifecycle management across sites and applications.

Selected PoE models provide a total power budget of up to 240 W, delivering power and data over a single cable. This simplifies the installation of HD cameras, wireless access points and other powered industrial devices. Advanced PoE management enables remote monitoring and control of connected equipment.

Powered by WeOS, Lynx 3000 series Gen2 provides comprehensive functionality for network redundancy, routing, segmentation, management and security. Secure boot verifies software integrity during startup, while the Trusted Platform Module (TPM) provides a hardware root of trust for protecting cryptographic keys and sensitive data. VPN, stateful firewall and IEEE 802.1X capabilities help protect network access and communications. Lynx 3306, Lynx 3310 and Lynx 3510 Gen2 variants are certified to IEC 62443-4-2 Security Level 2.

Available in two mechanical designs with flexible mounting options, the Lynx 3000 series Gen2 is suited to transportation, manufacturing, energy, smart cities and other critical infrastructure applications requiring secure connectivity, high availability and long-term reliability.

[a]Operating-temperature limitations depend on model and installation conditions. See the user guide.
[b]Applies to Lynx 3306, 3310 and 3510 models

Specifications - Lynx 3000 Series Gen2

Dimensional drawing - Form factor A

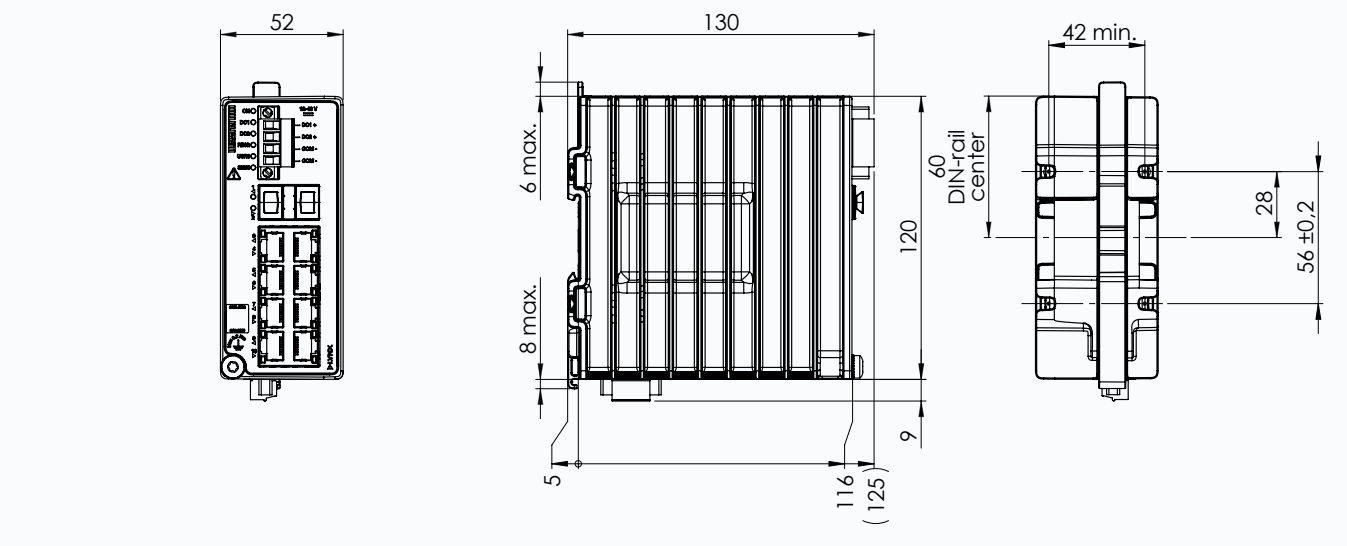

Dimensional drawing - Form factor B

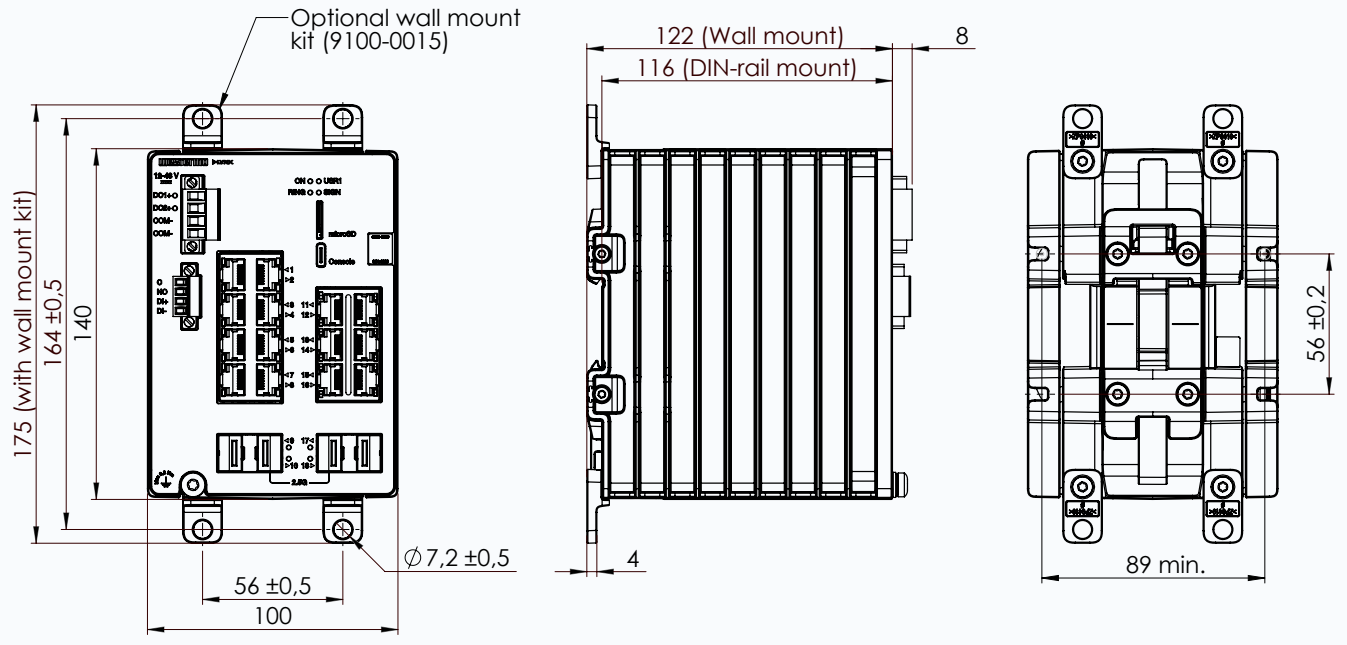

Housing	Form factor A	Form factor B
Dimensions (W x H x D)	52 x 135 x 130 mm (2.05 x 5.31 x 5.12 inches) DIN-rail mounted, with contacts Wall mount brackets not available	100 x 140 x 116 mm (3.94 x 5.51 x 4.57 inches) DIN-rail mounted, with contact 100 x 175 x 122 mm (3.94 x 6.89 x 4.80 inches) wall mounted with brackets, with contact
Housing	Full metal	
Weight	1100 gr	1930 gr

Power parameters	
Rated voltage	12 to 48 VDC (non PoE models) 54 VDC (PoE models)
Operating voltage	Non-PoE models: 9.6 to 60 VDC PoE models: 802.3at (PoE+): 53 to 57 VDC 802.3af: 48 to 57 VDC No PoE usage: 9.6 to 60 VDC
Rated current	*Form factor A:* Lynx-3510(-E)-F4G-T6G-LV(-CC), Lynx-3510(-E)-F2G2.5-F2G-T6G-LV(-CC), Max 1.1 A at 12 VDC, max 0.27 A at 48 VDC PoE models, max 4.8 A All others, max 0.6 A at 12 VDC, max 0.16 A at 48 VDC *Form factor B:* Max 1.2 A at 12 VDC, max 0.29 A at 48 VDC
Power budget (PoE models)[a.]	*Form factor A:* Max. 240 W total PD consumption Max. 30 W per PoE port

[a.] See User guide for limitations

Environmental	
Operating temperature	-40 to +70°C (-40 to +158°F)
Storage and transport temperatures	-40 to +85°C (-40 to +185°F)[a.]
Ingress protection	IP40
Humidity (operating)	5-95% relative humidity
Corrosive gases	IEC 60068-2-60
Altitude	2000 m/80 kPa
MTBF Telcordia	Lynx-3306(-E)-F2G-T4-LV, Lynx-3510(-E)-F2G-T8G-LV(-CC): 1,035,000 h Lynx-3310(-E)-F2G-T8-LV(-CC): 1,138,000 h Lynx-3510(-E)-F2G2.5-F2G-T6G-LV(-CC), Lynx-3510(-E)-F4G-T6G-LV(-CC): 1,022,000 h Lynx-3510-F2G-P8G-LV(-CC), Lynx-3510(-E)-F2G2.5-P8G-LV: 638,000 h Lynx-3518(-E)-F4G-T14G-LV, Lynx-3518(-E)-F2G2.5-F2G-T14G-LV: 1,071,000 h
MTBF MIL-HBDK-217F	Lynx-3306(-E)-F2G-T4-LV, 3510(-E)-F2G-T8G-LV(-CC) and Lynx-3510(-E)-F2G2.5-T8G-LV(-CC): 879,000 h Lynx-3310(-E)-F2G-T8-LV(-CC): 974,000 h Lynx-3510(-E)-F4G-T6G-LV(-CC), Lynx-3510(-E)-F2G2.5-F2G-T6G-LV(-CC): 662,000 h Lynx-3510-F2G-P8G-LV(-CC), Lynx-3510(-E)-F2G2.5-P8G-LV: 583,000 h Lynx-3518(-E)-F4G-T14G-LV, Lynx-3518(-E)-F2G2.5-F2G-T14G-LV: 460,000 h

[a.] -55 to +85°C (-48,3 to +185°F) for Lynx-3510(-E)-F4G-T6G-LV(-CC) and Lynx-3510(-E)-F2G2.5-F2G-T6G-LV(-CC)

Interface	
Console	USB-C
Micro SD	Secure Digital 2.0
Digital input	1 pcs, screw terminal
Digital output	1 pcs, screw terminal

Art. no.	Model[a.]	SFP ports	RJ45 ports (PoE)	Other ports & interfaces
Form factor A - 6 ports				
3627-1600	Lynx-3306-F2G-T4-LV	2 x 1 Gbit/s	4 x 100 Mbit/s	-
3627-1610	Lynx-3306-E-F2G-T4-LV			
Form factor A - 10 ports				
3627-1560	Lynx-3310-F2G-T8-LV	2 x 1 Gbit/s	8 x 100 Mbit/s	-
3627-1561	Lynx-3310-F2G-T8-LV-CC			
3627-1570	Lynx-3310-E-F2G-T8-LV			
3627-1571	Lynx-3310-E-F2G-T8-LV-CC			
3627-1520	Lynx-3510-F2G-T8G-LV		8 x 1 Gbit/s	I/O, micro SD
3627-1521	Lynx-3510-F2G-T8G-LV-CC			
3627-1530	Lynx-3510-E-F2G-T8G-LV			
3627-1531	Lynx-3510-E-F2G-T8G-LV-CC			
3627-1540	Lynx-3510-F2G2.5-T8G-LV	2 x 2.5 Gbit/s		
3627-1541	Lynx-3510-F2G2.5-T8G-LV-CC			
3627-1550	Lynx-3510-E-F2G2.5-T8G-LV			
3627-1551	Lynx-3510-E-F2G2.5-T8G-LV-CC			
3627-1500	Lynx-3510-F2G-P8G-LV	2 x 1 Gbit/s	8 x 1 Gbit/s (8 x PoE+, 802.3at)	
3627-1501	Lynx-3510-F2G-P8G-LV-CC			
3627-1510	Lynx-3510-E-F2G-P8G-LV			
3627-1511	Lynx-3510-E-F2G-P8G-LV-CC			
3627-1580	Lynx-3510-F2G2.5-P8G-LV	2 x 2.5 Gbit/s		
3627-1590	Lynx-3510-E-F2G2.5-P8G-LV			
3627-0620	Lynx-3510-F4G-T6G-LV	4 x 1 Gbit/s	6 x 1 Gbit/s	
3627-0630	Lynx-3510-E-F4G-T6G-LV			
3627-0640	Lynx-3510-F2G2.5-F2G-T6G-LV	2 x 1 Gbit/s 2 x 2.5 Gbit/s		
3627-0650	Lynx-3510-E-F2G2.5-F2G-T6G-LV			
Form factor B - 18 ports				
3627-4020	Lynx-3518-F4G-T14G-LV	4 x 1 Gbit/s	14 X 1 Gbit/s	I/O, micro SD
3627-4030	Lynx-3518-E-F4G-T14G-LV			
3627-4060	Lynx-3518-F2G2.5-F2G-T14G-LV	2 x 1 Gbit/s 2 x 2.5 Gbit/s		
3627-4070	Lynx-3518-E-F2G2.5-F2G-T14G-LV			

[a.] E = extended level (layer 3), non-E = standard level (layer 2), CC = conformal coating

Approvals	
EMC	EN/IEC 61000-6-2, Immunity industrial environments EN/IEC 61000-6-4, Emission industrial environments
Trackside	EN 50121-4/IEC 62236-4, Railway signalling and telecommunications apparatus
Environmental[a.]	NEMA TS2, Traffic Controller Assemblies with NTCIP Requirements AREMA; Communications and Signals manual[b.]
Marine	DNV rules for classification - Ships and offshore units
Security[c.]	IEC 62443-4-2, Security Level 2
Safety	EN/IEC/UL 61010-1, Safety requirements for electrical equipment for measurement, control, and laboratory use - Part 1: General requirements EN/IEC/UL 61010-2-201, Safety requirements for electrical equipment for measurement, control, and laboratory use - Part 2-201: Particular requirements

[a.] Applicable for non-PoE models only
[b.] Applicable for Lynx(-E)-3510-F4G-T6G-LV(-CC), Lynx-3510(-E)-F2G2.5-F2G-T6G-LV(-CC) and form factor B (Lynx-3518)
[c.] Applies to Lynx 3306, 3310 and 3510 models

Switch properties	
Number of VLAN	64
Priority queues	8

Software	
WeOS	WeOS 5; westermo.com/solutions/weos
WeConfig	westermo.com/solutions/weconfig

Warranty	
Validity	5 years

Ordering information	
Art. no.	**Description**
3627-0620	Lynx-3510-F4G-T6G-LV
3627-0630	Lynx-3510-E-F4G-T6G-LV
3627-0640	Lynx-3510-F2G2.5-F2G-T6G-LV
3627-0650	Lynx-3510-E-F2G2.5-F2G-T6G-LV
3627-1500	Lynx-3510-F2G-P8G-LV
3627-1501	Lynx-3510-F2G-P8G-LV-CC
3627-1510	Lynx-3510-E-F2G-P8G-LV
3627-1511	Lynx-3510-E-F2G-P8G-LV-CC
3627-1520	Lynx-3510-F2G-T8G-LV
3627-1521	Lynx-3510-F2G-T8G-LV-CC
3627-1530	Lynx-3510-E-F2G-T8G-LV
3627-1531	Lynx-3510-E-F2G-T8G-LV-CC
3627-1540	Lynx-3510-F2G2.5-T8G-LV
3627-1541	Lynx-3510-F2G2.5-T8G-LV-CC
3627-1550	Lynx-3510-E-F2G2.5-T8G-LV
3627-1551	Lynx-3510-E-F2G2.5-T8G-LV-CC
3627-1560	Lynx-3310-F2G-T8-LV
3627-1561	Lynx-3310-F2G-T8-LV-CC
3627-1570	Lynx-3310-E-F2G-T8-LV
3627-1571	Lynx-3310-E-F2G-T8-LV-CC
3627-1580	Lynx-3510-F2G2.5-P8G-LV
3627-1590	Lynx-3510-E-F2G2.5-P8G-LV
3627-1600	Lynx-3306-F2G-T4-LV
3627-1610	Lynx-3306-E-F2G-T4-LV
3627-4020	Lynx-3518-F4G-T14G-LV
3627-4030	Lynx-3518-E-F4G-T14G-LV
3627-4060	Lynx-3518-F2G2.5-F2G-T14G-LV
3627-4070	Lynx-3518-E-F2G2.5-F2G-T14G-LV

Accessories	
1 Gbit transceivers **2.5 Gbit transceivers**	https://www.westermo.com/products/accessories/sfp-transceivers
3125-0150	PS-60, power supply
3125-0160	PS-260, DIN-rail power supply unit

Specification WeOS 5

The WeOS operating system has been developed by Westermo for its current as well as future range of Ethernet hardware products. This layer 2 and layer 3 switching solution enables Westermo to create complex multimedia ring networks and routing solutions. WeOS not only provides solutions to many challenging industrial networking issues, but also helps to protect investments by ensuring the future availability of fully compatible solutions. WeOS is the core of our latest ranges of Ethernet hardware allowing complex multimedia ring networks and routing solutions to be created.

Westermo has many years of experience developing products for industrial applications. At the heart of all Westermo networking solutions is the need for ease of use. By standardising on a single operating system for all Westermo Ethernet products this helps to simplify the installation, operation and maintenance of individual devices and complete networks. Once a user is familiar with a Westermo product, that knowledge can be readily applied to all our other devices. A web screen simplifies the configuration of many functions, whilst a command line interface allows for fine tuning.

WeOS Standard - Layer 2 protocols and functionality
Resilience and High Availability
FRNTv0/v2 flexible ring topologies (multiring, subrings and ring coupling), IEEE 802.1D/802.1w (RSTP), IEEE 802.1AX/802.3ad Link Aggregation (LACP and Static), IEC 62439-2 Media Redundancy Protocol (MRP; single instance or dual instances at MRP master)[a.,]
Layer 2 Switching
IEEE 802.1D MAC Bridges, IEEE 802.1Q Static VLAN and VLAN Tagging, Q-in-Q Tunnelling, IEEE 802.1AB LLDP, IGMPv1/v2/v3 Snooping, Static Multicast MAC filters, MLDv1/v2 Snooping
Layer 2 QoS
IEEE 802.1p Class of Service with flexible classification (VLAN tag priority, IP DSCP/ToS, Port ID), MAC Authentication, IEEE 802.1X Port Access Control, Ingress and Egress Rate limiting
IP Host Services
Static IPv4/v6 Address, DHCP Client, DNS Client, DDNS, ZeroConf (mDNS and SSDP), NTP Client (NTPv4), IPv4/v6 Interfaces (Ethernet, VLAN, Loopback and Blackhole)
Network Servers
DHCP Server (including options 1, 3, 6, 7, 12, 15, 42, 61, 66, 68 and 82), DHCP Relay Agent (including options 54 and 82), DNS Proxy Server (DNS forwarder and Host records), NTP client/server (NTPv4)
Management Tools
Westermo configuration tool WeConfig, Web interface (HTTP and HTTPS), Command Line Interface (CLI) via console port, SSHv2 and Telnet, Local and Central Authentication (RADIUS/TACACS+), Role Based Access Control (RBAC), Password Compliance Policy, SNMPv1/v2c/v3, Secure Copy (SCP) for remote file upload and download, Local file management (via HTTP, FTP, TFTP and SCP), Load/save files from/to external memory[b.], Configuration and Deployment using external memory[b.], Tech support button, Flexible alarm and event handling system, RFC5424/RFC3164 Syslog (log files and remote syslog server), Port monitoring
SNMP MIB Support (read-only)
RFC 1213 MIB-2, RFC 2819 RMON MIB, RFC 2863 Interface MIB, RFC 3433 Entity Sensor MIB, RFC 3635 Ether-like Interface MIB, RFC 4133 Entity MIB, RFC 4188 Bridge MIB, RFC 4318 RSTP MIB, RFC 4363 Q-BRIDGE MIB, RFC 4836 MAU MIB, IEEE 802.1AB LLDP MIB, IEEE 802.1AX LAG MIB, IEC 62439-2 MRP MIB, WESTERMO-DDM MIB (SFP), WESTERMO-EVENT MIB, WESTERMO-FRNT MIB, WESTERMO-INTERFACE MIB, WESTERMO-TCN MIB

[a.] Available as add-on-function. Please see your local Westermo sales contact to purchase a license for your product.

[b.] Only applicable for models with SD card slot

WeOS Extended - Layer 3 protocols and functionality[a.]
IP Host Services
IP Interfaces (SSL, VPN, GRE)
IP Routing and VPN
Static IP Routing, Floating Static Routes, Multinetting, Proxy ARP, Dynamic IP routing (OSPFv2, RIPv1/v2), VRRPv2/v3, Protocol Independent Multicast - Sparse-Mode (PIM-SM), Static Multicast Routing, Stateful Inspection Firewall, Firewall Hit Counters, IP Masquerading (NAT/NAPT), Port Forwarding, Stateless NAT (1-1 NAT), IPsec VPN (IKEv2 PSK), SSL VPN (Client and Server, Certificate Authentication, Pre-shared Key (PSK) Point-to-Point Mode, Layer-2 and Layer-3 VPN, Layer-2 VPN bridging, Address pool and address per CN, TLS Authentication), Generic Routing Encapsulation (GRE), Policy Based Routing, Equal-Cost Multi-Path (ECMP), OpenVPN Multipath TCP (MPTCP), Route monitor
SNMP MIB Support (read-only)
RFC 2787 VRRPv2 MIB, RFC 6527 VRRPv3 MIB

[a.] Products with software level WeOS Extended include all functionality listed for WeOS Standard