# BXP-A101 Series

*Compact box computers with Intel Atom® x6211E/x6425E processor*

### Features and Benefits

- Box-type computer with fanless design
- Intel Atom® X Series processor
- Compact size to fit most field applications
- External dual storage with a removable cover design for easy maintenance
- -30 to 70°C operating temperature range

### Certifications

## Introduction

The BXP-A101 computers are powered by an Intel Atom® X processor and come with 2 Gigabit Ethernet ports, 2 software-selectable RS-232/422/485 serial ports, 4 digital inputs, and 4 digital outputs. A dual-storage design that includes CFast and SD slots, and an internal M.2 socket enable easy storage expansion. A removeable cover design enables quick and easy storage swap, delivering one more user-friendly feature in a reliable, durable, and versatile platform.

The BXP-A101 Series have compact wall-mounting and DIN-rail mounting models. The computers come in a fanless design and can withstand a temperature range of -30 to 70°C, making them a good fit for harsh operating environments. The built-in TPM 2.0 module secures the platform from unauthorized access. The BXP-A101 is an intelligent computing solution that perfectly fulfills both OT and IT requirements of industrial environments.

## Appearance

### DIN-rail Models (BXP-A101-E2-DR-T/E4-DR-T/E2-M2-DR-T/E4-M2-DR-T)

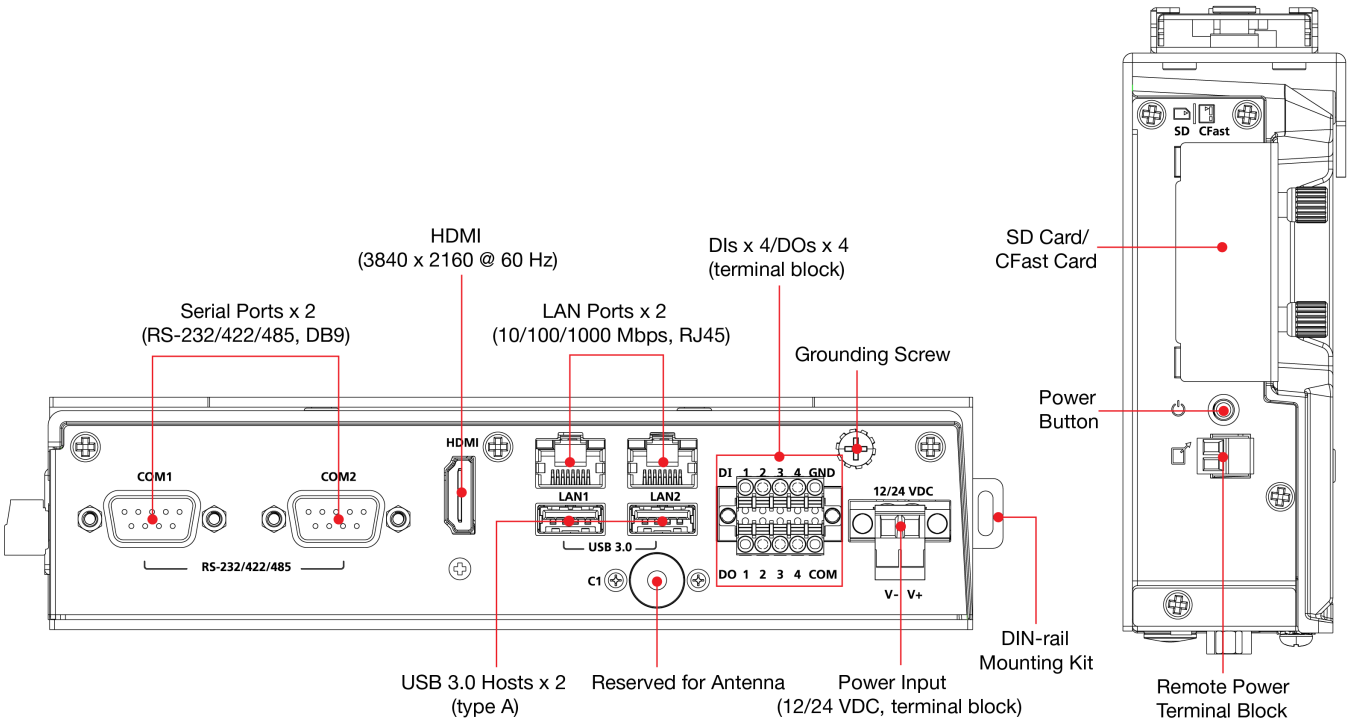


### Wall-mount Models (BXP-A101-E2-T/E4-T/E2-M2-T/E4-M2-T)

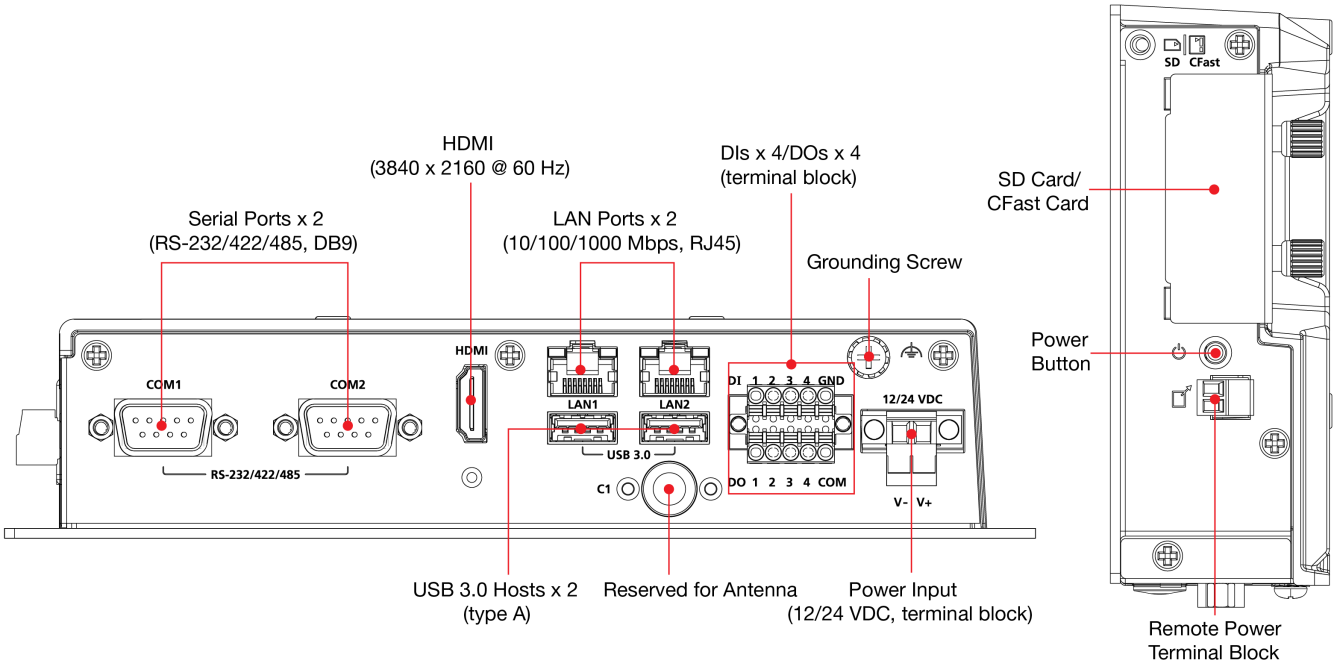

## Specifications

### Computer

| | |
|---|---|
| CPU | BXP-A101-E2 models: Intel Atom® x6211E processor (dual-core, 1.5 M cache, 1.30 GHz)<br>BXP-A101-E4 models: Intel Atom® x6425E processor (quad-core, 1.5 M cache, 2.00 GHz) |
| System Memory Slot | SODIMM DDR4 slots x 1, up to 32 GB max. |
| System Memory Pre-installed | 8 GB DDR4 |
| Storage Slot | BXP-A101-E2-T/E4-T/E2-DR-T/E4-DR-T:<br>CFast slot x 1 (SATAIII interface)<br>SD slot x 1, SD 3.0 interface (SDHC/SDXC)<br>BXP-A101-E2-M2-T/E4-M2-T/E2-M2-DR-T/E4-M2-DR-T:<br>CFast slot x 1 (SATAIII interface)<br>SD slot x 1, SD 3.0 interface (SDHC/SDXC)<br>M.2 M-key 2242 slot x 1 |
| Expansion Slots | mPCIe slots x 1 |
| Supported OS | Windows images and drivers supported:<br>- Windows 11 IoT Enterprise LTSC 2024 64-bit<br>- Windows 11 Professional 64-bit<br>- Windows 10 IoT Enterprise LTSC 2021 64-bit<br><br>Linux image supported:<br>- Debian 12 (kernel 6.10)<br><br>Linux drivers supported:<br>- Debian 12 (kernel 6.10)<br>- Ubuntu 22.04 LTS (kernel 5.15)<br>- RHEL 9 (kernel 5.14) |
| Graphics Controller | Intel® UHD Graphics |

### Computer Interface

| | |
|---|---|
| Ethernet Ports | Auto-sensing 10/100/1000 Mbps ports (RJ45 connector) x 2 |
| Serial Ports | RS-232/422/485 ports x 2 (software-selectable, DB9 male connector) |
| USB 3.0 | USB 3.0 hosts x 2, type-A connectors |
| Digital Input | DIs x 4 |
| Digital Output | DOs x 4 |
| TPM | TPM v2.0 |
| Video Output | HDMI 1.2a x 1, (type-A connector) |
| SIM Format | Nano |
| Number of SIMs | 1 |
| Buttons | Power button |

### Ethernet Interface

| | |
|---|---|
| Magnetic Isolation Protection | 1.5 kV (built-in) |

### Serial Interface

| | |
|---|---|
| Baudrate | 50 bps to 115.2 kbps |
| Connector | DB9 male |
| Data Bits | 5, 6, 7, 8 |

| | |
|---|---|
| Parity | None, Even, Odd, Space, Mark |
| Stop Bits | 1, 1.5, 2 |
| Flow Control | RTS/CTS, XON/XOFF, Automatic Data Direction Control (ADDC) for RS-485, RTS Toggle (RS-232 only) |

### Serial Signals

| | |
|---|---|
| RS-232 | TxD, RxD, RTS, CTS, DTR, DSR, DCD, GND |
| RS-422 | Tx+, Tx-, Rx+, Rx-, GND |
| RS-485-2w | Data+, Data-, GND |
| RS-485-4w | Tx+, Tx-, Rx+, Rx-, GND |

### Digital Inputs

| | |
|---|---|
| Connector | Spring-type Euroblock terminal |
| Sensor Type | Dry contact<br>Wet contact (NPN) |
| Dry Contact | Logic 0: Close to GND<br>Logic 1: Open |
| Wet Contact (COM to DI) | Logic 0: 10 to 30 VDC<br>Logic 1: 3 VDC max |

### Digital Outputs

| | |
|---|---|
| Connector | Spring-type Euroblock terminal |
| I/O Type | Sink |
| Current Rating | 200 mA per channel |
| Voltage | Logic 0: 200mA max. per channel, sink<br>Logic 1: 24 VDC (typ.), 30 VDC (max.), open collector |

### LED Indicators

| | |
|---|---|
| System | Power x 1 |
| LAN | 2 per port (10/100/1000 Mbps) |

### Power Parameters

| | |
|---|---|
| Input Voltage | 12/24 VDC |
| Power Connector | Screw-fastened Euroblock terminal |
| Power Consumption | 50 W |

### Physical Characteristics

| | |
|---|---|
| Housing | Metal |
| IP Rating | IP20 |
| Dimensions | BXP-A101-E2-T/E4-T/E2-M2-T/E4-M2-T:<br>207 x 116.1 x 44.5 mm (8.14 x 4.57 x 1.75 in)<br>BXP-A101-E2-DR-T/E4-DR-T/E2-M2-DR-T/E4-M2-DR-T:<br>186 x 121 x 46.7 mm (7.32 x 4.76 x 1.84 in) |

| | |
|---|---|
| Weight | BXP-A101-E2-T/E4-T/E2-M2-T/E4-M2-T:<br>1,225 g (2.7 lb)<br>BXP-A101-E2-DR-T/E4-DR-T/E2-M2-DR-T/E4-M2-DR-T:<br>1,500 g (3.3 lb) |
| Installation | BXP-A101-E2-T/E4-T/E2-M2-T/E4-M2-T:<br>Wall mounting<br>BXP-A101-E2-DR-T/E4-DR-T/E2-M2-DR-T/E4-M2-DR-T:<br>DIN-rail mounting |

## Environmental Limits

| | |
|---|---|
| Operating Temperature | -30 to 70°C (-22 to 158°F) |
| Storage Temperature | -40 to 70°C (-40 to 158°F) |
| Ambient Relative Humidity | 5 to 95% (non-condensing) |

## Standards and Certifications

| | |
|---|---|
| EMC | EN 55032/35 |
| EMI | CISPR 32, FCC Part 15B Class A<br>BSMI |
| EMS | IEC 61000-4-2 ESD: Contact: 4 kV; Air: 8 kV<br>IEC 61000-4-3 RS: 80 MHz to 1 GHz: 3 V/m<br>IEC 61000-4-4 EFT: Power: 0.5 kV; Signal: 0.5 kV<br>IEC 61000-4-5 Surge: Power: 0.5 kV, Signal: 1 kV<br>IEC 61000-4-6 CS: 3 V<br>IEC 61000-4-8 PFMF: 1 A/m at 50 to 60 Hz |
| Safety | BSMI<br>IEC 62368-1<br>UL 62368-1 |
| Shock | IEC 60068-2-27 |
| Vibration | IEC 60068-2-6<br>IEC 60068-2-64 |
| Package Drop Test | ISTA 1A |
| Package Vibration Test | ISTA 1A |

## Declaration

| | |
|---|---|
| Green Product | RoHS, CRoHS, WEEE |

## Reliability

| | |
|---|---|
| Time Source | Built-in RTC (real-time clock) with lithium-battery backup |
| Automatic Reboot Trigger | Built-in WDT |

## MTBF

| | |
|---|---|
| Time | 1,581,038 hrs |
| Standards | Telcordia (Bellcore), GB |

## Warranty

| | |
|---|---|
| Warranty Period | 3 years |
| Details | See www.moxa.com/warranty |

Package Contents

| | |
|---|---|
| Device | 1 x BXP-A101 Series computer |
| Installation Kit | 1 x terminal block, 2-pin, for DC power input<br>1 x terminal block, 10-pin, for DIO<br>1 x terminal block, 2-pin, for connecting a power button extension<br>1 x M.2 screw (models with M.2 sockets) |
| Documentation | 1 x quick installation guide<br>1 x warranty card |

## Dimensions

### DIN-rail Models (BXP-A101-E2-DR-T/E4-DR-T/E2-M2-DR-T/E4-M2-DR-T)

Unit: mm (inch)

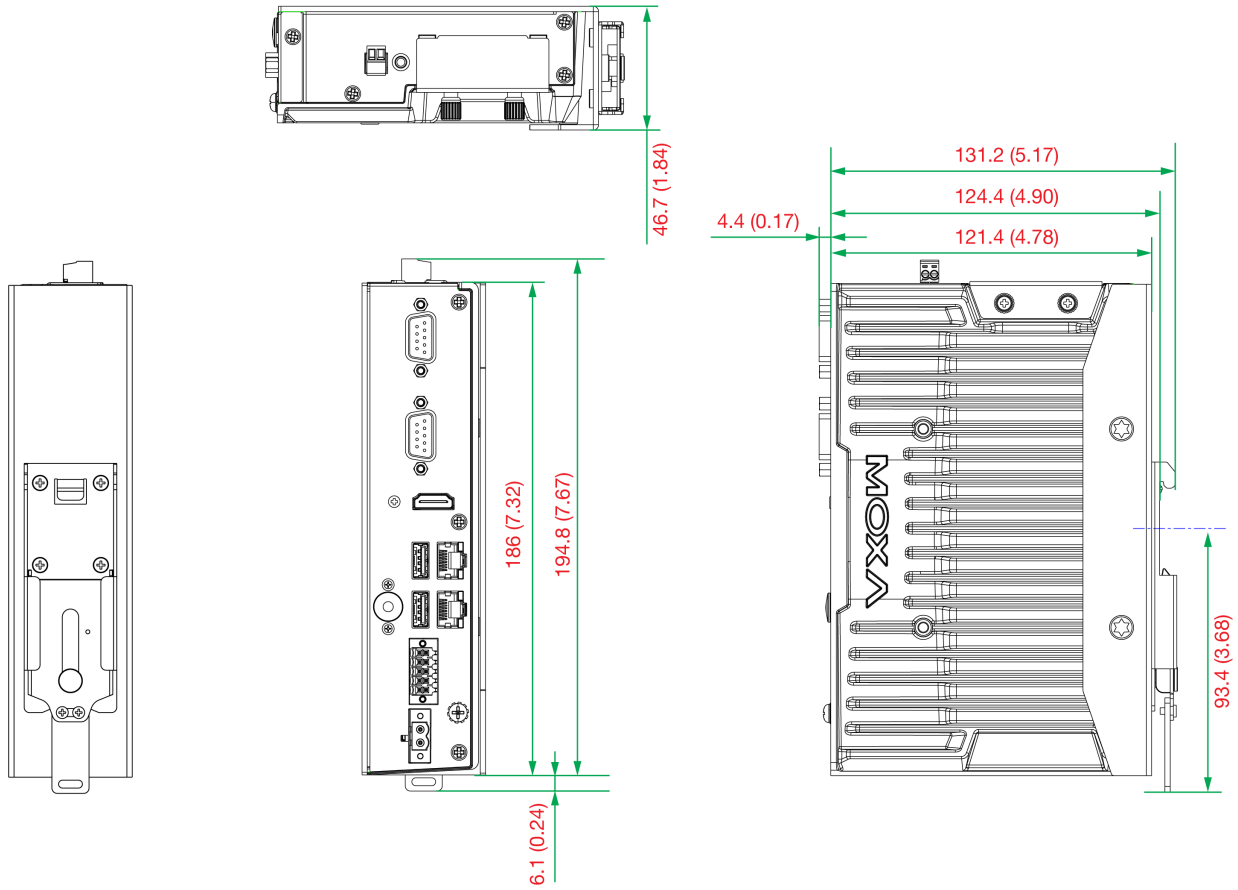

### Wall-mount Models (BXP-A101-E2-T/E4-T/E2-M2-T/E4-M2-T)

Unit: mm (inch)

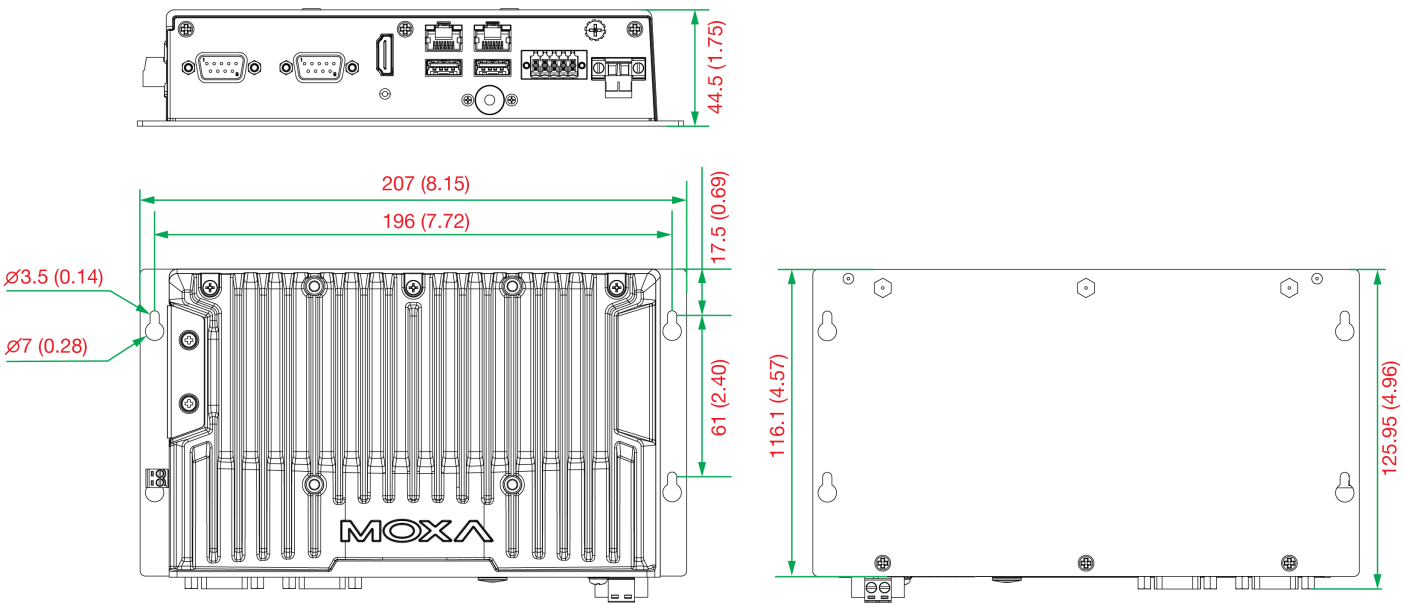


## Ordering Information

| Model Name | CPU | Memory | Storage Slots | OS Preinstalled | LAN/ Serial | USB 3.0 | DIs/ DOs | Video Outputs | Default Mounting | Power Input |
|---|---|---|---|---|---|---|---|---|---|---|
| BXP-A101-E2-T | Intel Atom® x6211E | 8 GB | 1 x CFast<br>1 x SD | – | 2/2 | 2 | 4 x DIs<br>4 x DOs | 1 x HDMI | Wall Mounting | 12/24 VDC |
| BXP-A101-E4-T | Intel Atom® x6425E | 8 GB | 1 x CFast<br>1 x SD | – | 2/2 | 2 | 4 x DIs<br>4 x DOs | 1 x HDMI | Wall Mounting | 12/24 VDC |
| BXP-A101-E2-DR-T | Intel Atom® x6211E | 8 GB | 1 x CFast<br>1 x SD | – | 2/2 | 2 | 4 x DIs<br>4 x DOs | 1 x HDMI | DIN-rail Mounting | 12/24 VDC |
| BXP-A101-E4-DR-T | Intel Atom® x6425E | 8 GB | 1 x CFast<br>1 x SD | – | 2/2 | 2 | 4 x DIs<br>4 x DOs | 1 x HDMI | DIN-rail Mounting | 12/24 VDC |
| BXP-A101-E2-M2-T | Intel Atom® x6211E | 8 GB | 1 x M.2<br>1 x CFast<br>1 x SD | – | 2/2 | 2 | 4 x DIs<br>4 x DOs | 1 x HDMI | Wall Mounting | 12/24 VDC |
| BXP-A101-E4-M2-T | Intel Atom® x6425E | 8 GB | 1 x M.2<br>1 x CFast<br>1 x SD | – | 2/2 | 2 | 4 x DIs<br>4 x DOs | 1 x HDMI | Wall-mount | 12/24 VDC |
| BXP-A101-E2-M2-DR-T | Intel Atom® x6211E | 8 GB | 1 x M.2<br>1 x CFast<br>1 x SD | – | 2/2 | 2 | 4 x DIs<br>4 x DOs | 1 x HDMI | DIN-rail mount | 12/24 VDC |
| BXP-A101-E4-M2-DR-T | Intel Atom® x6425E | 8 GB | 1 x M.2<br>1 x CFast<br>1 x SD | – | 2/2 | 2 | 4 x DIs<br>4 x DOs | 1 x HDMI | DIN-rail mount | 12/24 VDC |

© Moxa Inc. All rights reserved. Updated Sep 01, 2025.

This document and any portion thereof may not be reproduced or used in any manner whatsoever without the express written permission of Moxa Inc. Product specifications subject to change without notice. Visit our website for the most up-to-date product information.